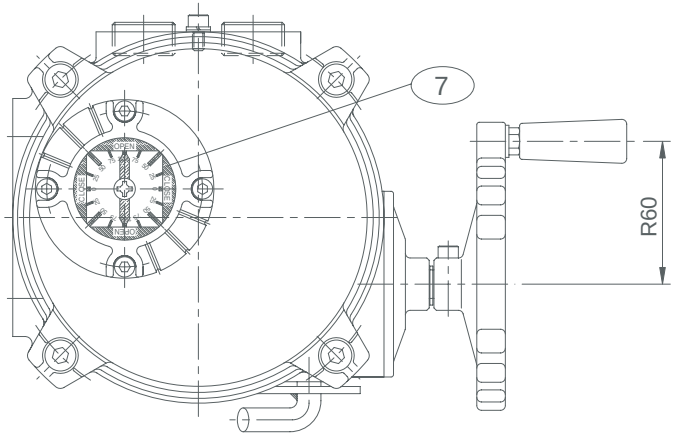

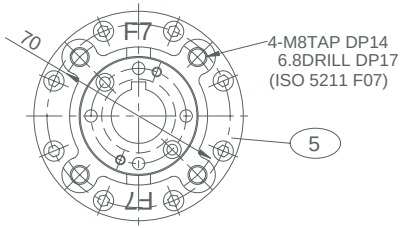

NO	PART NAME	MATERIAL	Q'TY	REMARK
1	BODY	AC2B	1	AC4C
2	TOP COVER	AC2B	1	AC4C
3	HANDLE	AC2B	1	
4	LEVER	SM45C	1	SUM24L
5	BASE	GC250	1	
6	DRIVE BUSHING	SM45C	1	
7	INDICATOR	PC	1	
8	CONDUIT ENTRIES		2	PF3/4"
9	STOPPER BOLTS	SUS316	2	M8*40
10				
11				
12				

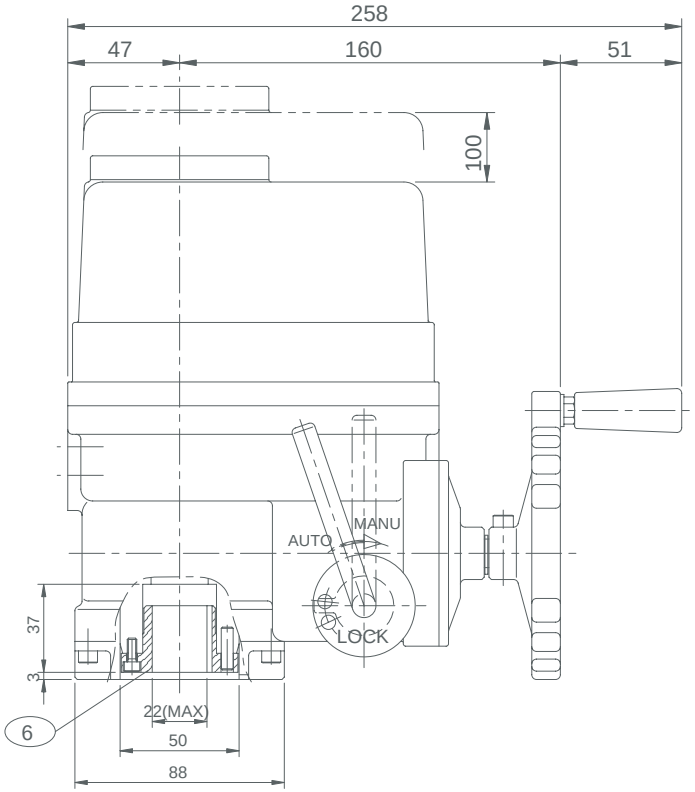

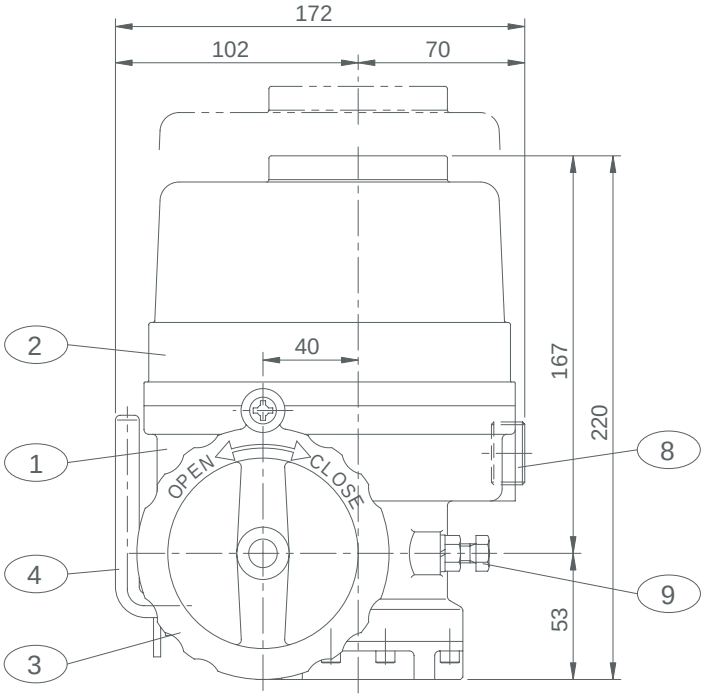

ITQ0100	1
APP'L,FILE	

i-tork CONTROLS Ltd.
http://www.i-tork.com

DRAWN	DESIGN	CHECKED	APPROVER
C.J. CHU	C.J. CHU		

MATERIAL		PROJ.	
DIMENSION mm	ISSU. DEPT. ITCDR	HEAT TREAT.	SURF. TRET.
SCALE N/S	DATE '03.10.15	SIZE A2	1 / 1

PART NAME: ITQ0100 LAYOUT

DWG NO: ITQ0100-50010-A